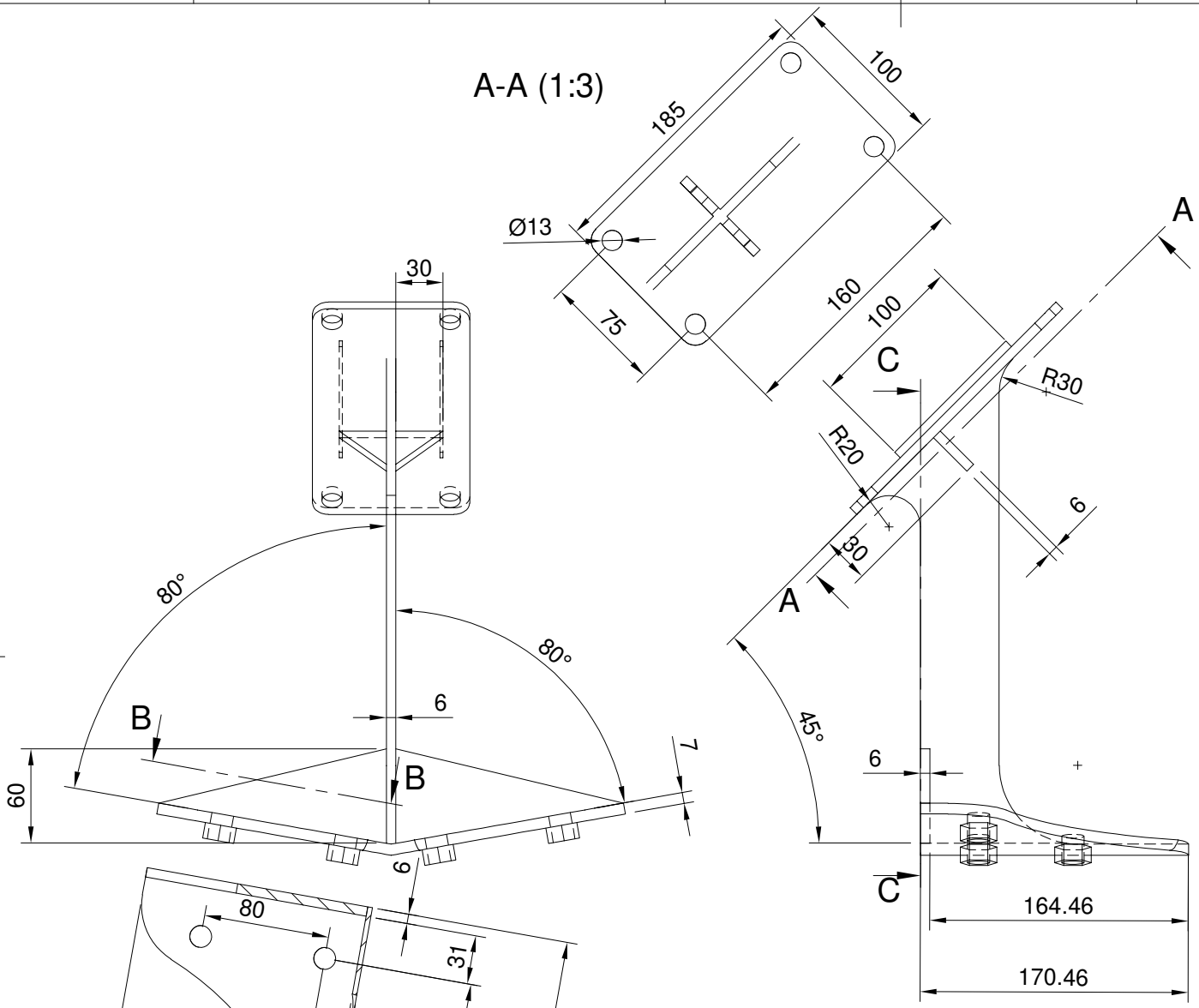

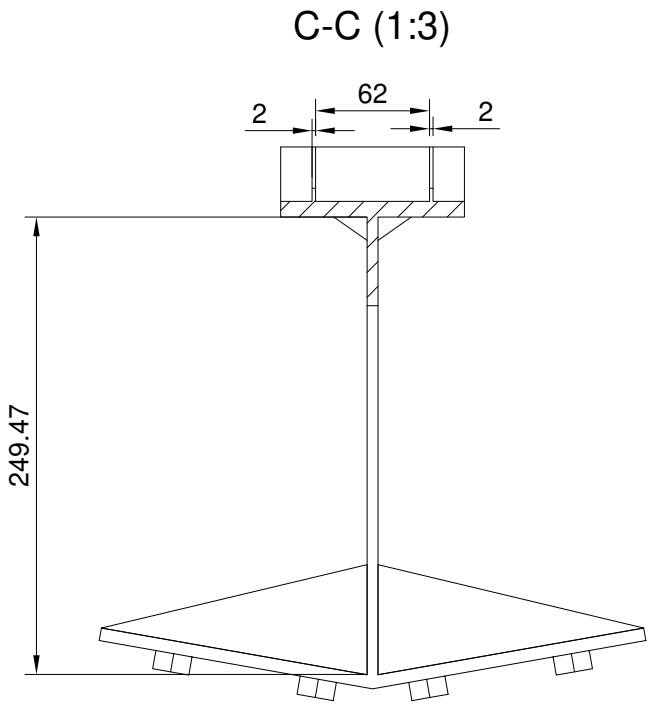

Dept.	Technical reference	Created by krichen abder 24/09/2025	Approved by	
		Document type	Document status	
		Title support plaque	DWG No.	
			Rev. / Date of issue	Sheet 1/1